GATE VALVE DN15 PN16

130-00000108
400822

DESCRIPTION: RG5 body gate valve, RG5 wedge. Non rising stem, screwed bonnet. Flat face flanges.

STANDARD & DESIGN:

End Standard	EN 1092-3
Inspection Standard	EN 12266
Remark	Connection: PN16
Min temperature	0°C
Max temperature	+95°C
Throughput Direction	Straight
End Type	Flanged
Standard	DIN
Material Disc	Bronze
Material Body	Bronze
Sub Category	GATE
Item Number	130-00000108
Category	Valve

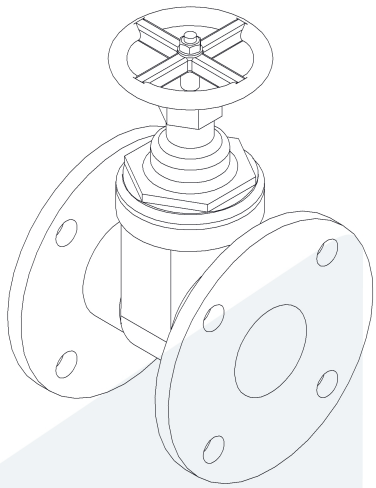

No	Part	Material	Code
1	Body	Bronze	CC 491K
2	Bonnet	Brass	CW 614N
3	Wedge	Bronze	CC 491K
4	Stem	Brass	CW 614N
5	Bonnet Gasket	Heat Resistant Fiber	
6	Packing	Heat Resistant Fiber	AF/15MA
7	Gland	Brass	CW 614N
8	Gland nut	Brass	CW 614N
9	Stem nut	Brass	CW 614N
10	Handwheel	Steel	

Application
Air
Boiler feedwater
Cargo oil
Condensate
Flammable hydraulic oil
Fuel oil
Gas
Lubricating oil
Non-flammable hydraulic fluid
Sea water
Steam
Thermal oil
Water

DN	Pressure Rating Id	nxdd	Hcd	Ø D	L	Kg	H	Ø M
15	16	4x14	65	95	75	1.2	82	50

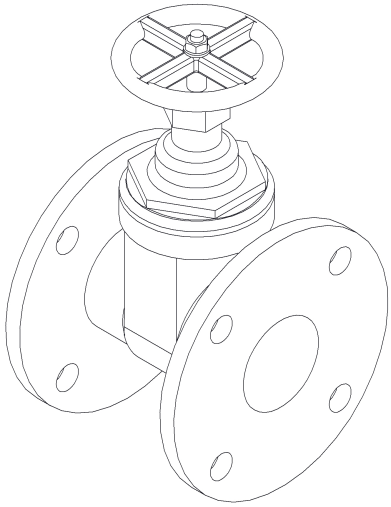

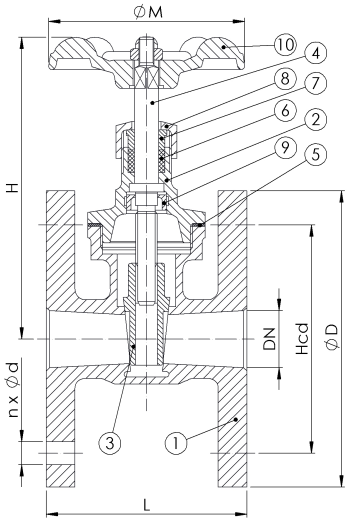

2022-12-29