# GLOBE VALVE DN150 PN16

## Straight type - SDNR with spring

**150-00000853**
**467052**

**DESCRIPTION:** Straight type, Cast Iron body, metal seated globe valve with rising stem and bolted bonnet. Raised face flanges.

**STANDARD & DESIGN:**

| | |
|---|---|
| End Standard | EN 1092-2 |
| Face To Face Standard | EN 558, series 1 |
| Remark | Connection: PN16 |
| Throughput Direction | Straight |
| Variant | SDNR with spring |
| End Type | Flanged |
| Design Code | DIN 86252 |
| Standard | DIN |
| Material Seat | Bronze |
| Material Disc | Nodular Cast Iron, GGG40.3 |
| Material Body | Cast Iron |
| Sub Category | GLOBE |
| Item Number | 150-00000853 |
| Category | Valve |

| No | Part | Material | Code | Application |
|---|---|---|---|---|
| 1 | Body | Cast Iron | GG25 | Cargo oil |
| 2 | Bonnet | Cast Iron | GG25 | Flammable hydraulic oil |
| 3 | Seat | Bronze | RG5 | Fuel oil |
| 4 | Disc | Nodular Cast Iron | GGG40.3 | Lubricating oil |
| 5 | Stem | Special Brass | Som59 | Sea water |
| 6 | Gland packing | Graphite | | Water |
| 7 | Gasket | Graphite | | |
| 8 | Handwheel | Cast Iron | GG25 | |

| DN | Pressure Rating Id | nxdd | Hcd | Ø D | L | Kg | H | Ø M |
|---|---|---|---|---|---|---|---|---|
| 150 | 16 | 8x23 | 240 | 285 | 480 | 75 | 420 | 300 |

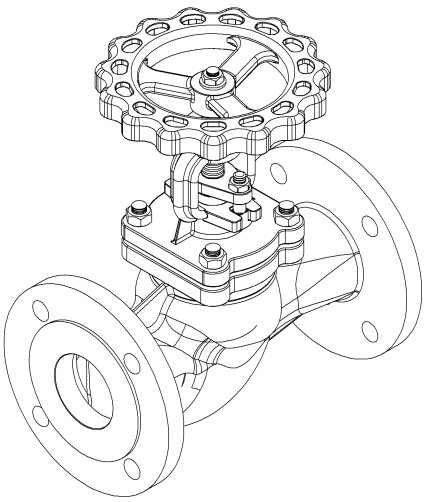

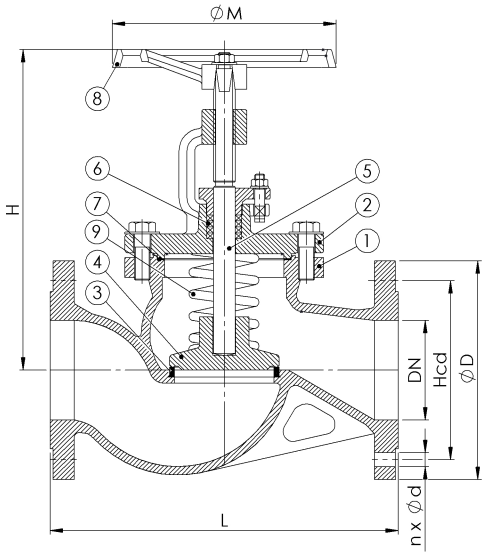


2023-01-25