GLOBE VALVE DN40 JIS 16K

Angled type - SDSL

150-00001669
F-7304

DESCRIPTION: Angled type, RG5 body, metal seated globe valve with rising stem. Screwed and secured bonnet. Flat face flanges.

STANDARD & DESIGN:

End Standard	JIS B2240
Inspection Standard	JIS F7400
Remark	Connection: JIS 16K
Throughput Direction	Angled
Variant	SDSL
End Type	Flanged
Design Code	JIS F7304
Standard	JIS
Material Disc	Brass
Material Body	Bronze
Sub Category	GLOBE
Item Number	150-00001669
Category	Valve

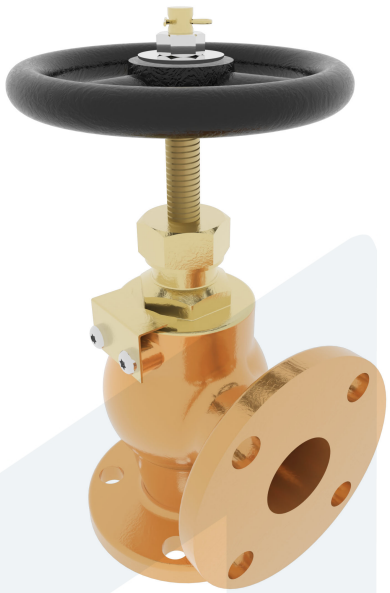

No	Part	Material	Code	Application
1	Body	Bronze	BC 6	Boiler feedwater
2	Bonnet	Brass	C 3771 BE	Condensate
3	Gland	Brass	C 3771 BE	Flammable hydraulic oil
4	Disc	Brass	C 3771 BE	Fuel oil
5	Stem	Brass	C 3771 BE	Lubricating oil
6	Gland nut	Brass	C 3771 BE	Sea water
7	Packing	Graphite		Steam
8	Handwheel	Cast Iron	FC 200	Water

DN	Pressure Rating Id	nxdd	Hcd	Ø D	L	Kg	H	Ø M
40	16	4x19	105	140	100	8.1	165	140

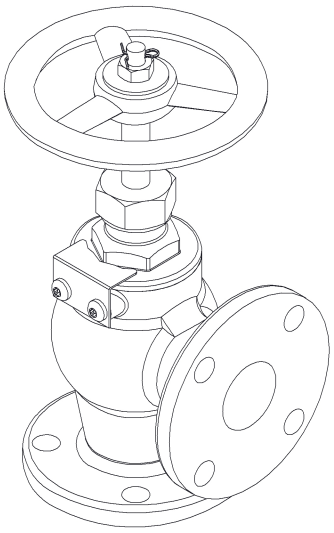

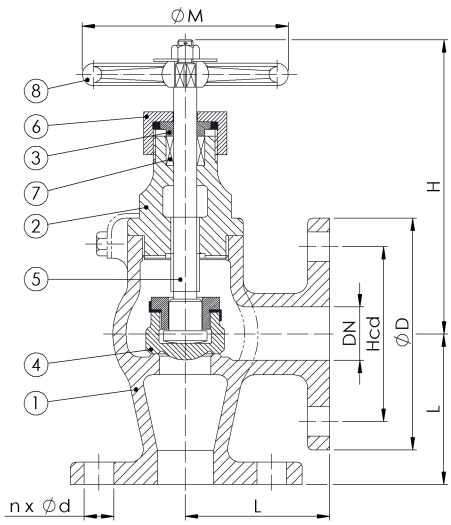

2023-01-14