GLOBE VALVE DN80 JIS 5K

Straight type - SDNR

150-00001840
F-7353

DESCRIPTION: Straight type, Cast Iron body, metal seated globe valve with rising stem. Bolted bonnet. Flat face flanges.

STANDARD & DESIGN:

End Standard	JIS B2239
Inspection Standard	JIS F7400
Remark	Connection: JIS 5K
Throughput Direction	Straight
Variant	SDNR
End Type	Flanged
Design Code	JIS F7305
Standard	JIS
Material Seat	Bronze
Material Disc	Bronze
Material Body	Cast Iron
Sub Category	GLOBE
Item Number	150-00001840
Category	Valve

No	Part	Material	Code
1	Body	Cast Iron	HT200
2	Bonnet	Cast Iron	HT200
3	Gland	Brass	H62
4	Disc	Bronze	ZCuSn5Pb5Zn5
5	Stem	Brass	H62
6	Gasket	Graphite	
7	Packing	Graphite	
8	Sealing ring	Bronze	ZCuSn5Pb5Zn5
9	Handwheel	Cast Iron	HT200

Application
Cargo oil
Flammable hydraulic oil
Fuel oil
Lubricating oil
Sea water
Water

DN	Pressure Rating Id	nxdd	Hcd	Ø D	L	Kg	H	Ø M
80	5	4x19	145	180	280	27.7	310	180

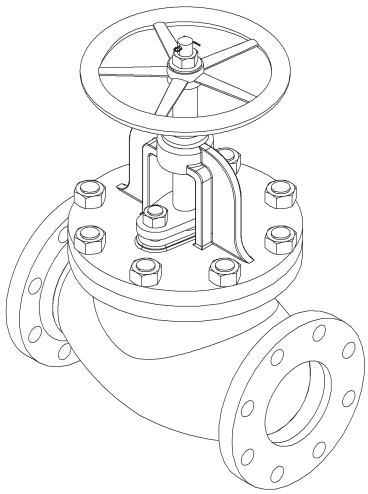

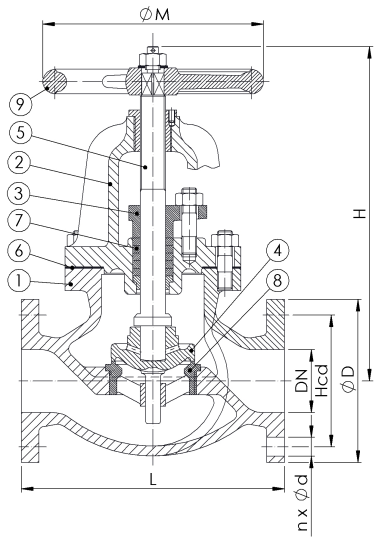

2023-01-14