GLOBE VALVE DN100 PN16

Straight type - SDNR with spring

150-00002063
467002

DESCRIPTION: Straight type, Nodular Cast Iron body, metal seated globe valve with rising stem and bolted bonnet. Raised face flanges.

STANDARD & DESIGN:

End Standard	EN 1092-2
Face To Face Standard	EN 558, series 1
Inspection Standard	EN 12266
Remark	Connection: PN16
Throughput Direction	Straight
Variant	SDNR with spring
End Type	Flanged
Design Code	EN 13789
Standard	DIN
Material Seat	Bronze
Material Disc	Bronze
Material Body	Nodular Cast Iron, GGG40
Sub Category	GLOBE
Item Number	150-00002063
Category	Valve

No	Part	Material	Code
1	Body	Nodular Cast Iron	GGG40
2	Bonnet	Nodular Cast Iron	GGG40
3	Seat	Bronze	RG5
4	Disc	Bronze	RG5
5	Stem	Special Brass	Som59
6	Gland packing	Graphite	
7	Gasket	Graphite	
8	Handwheel	Cast Iron	GG25
9	Spring	Stainless Steel	1.4301

Application
Boiler feedwater
Cargo oil
Condensate
Flammable hydraulic oil
Flammable media
Fuel oil
Lubricating oil
Non-flammable hydraulic fluid
Sea water
Water

DN	Pressure Rating Id	nxdd	Hcd	Ø D	L	Kg	H	Ø M
100	16	8x19	180	220	350	35	325	160

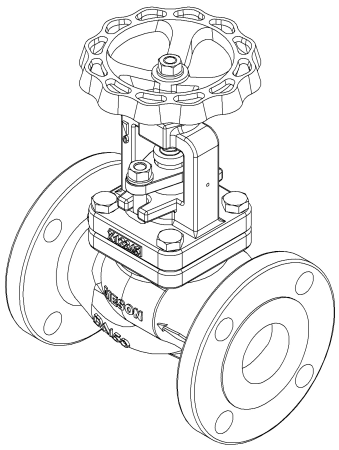

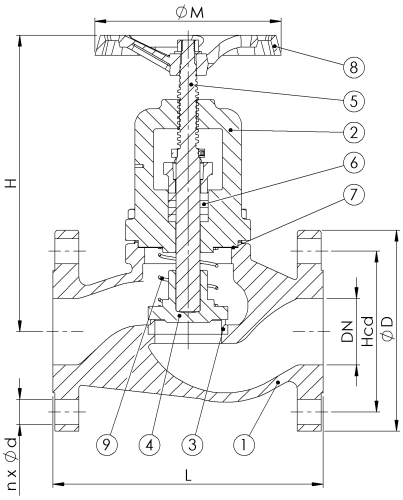

2023-01-25