GLOBE VALVE DN32 PN16

Angled type - SDSL

M61393
467102

DESCRIPTION: Angled type, Nodular Cast Iron body, metal seated globe valve with rising stem and bolted bonnet. Raised face flanges.

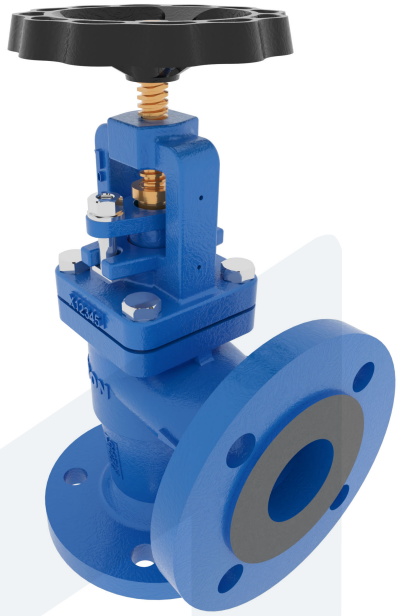

STANDARD & DESIGN:

End Standard	EN 1092-2
Face To Face Standard	EN 558, series 8
Inspection Standard	EN 12266
Remark	Connection: PN16
Throughput Direction	Angled
Variant	SDSL
End Type	Flanged
Design Code	EN 13789
Standard	DIN
Material Seat	Bronze
Material Disc	Bronze
Material Body	Nodular Cast Iron, GGG40
Sub Category	GLOBE
Item Number	M61393
Category	Valve

No	Part	Material	Code
1	Body	Nodular Cast Iron	GGG40
2	Bonnet	Nodular Cast Iron	GGG40
3	Seat	Bronze	RG5
4	Disc	Bronze	RG5
5	Stem	Special Brass	Som59
6	Gland packing	Graphite	
7	Gasket	Graphite	
8	Handwheel	Cast Iron	GG25

Application
Boiler feedwater
Cargo oil
Condensate
Flammable hydraulic oil
Flammable media
Fuel oil
Lubricating oil
Non-flammable hydraulic fluid
Sea water
Water

DN	Pressure Rating Id	nxdd	Hcd	Ø D	L	Kg	H	Ø M
32	16	4x19	100	140	105	6.7	190	120

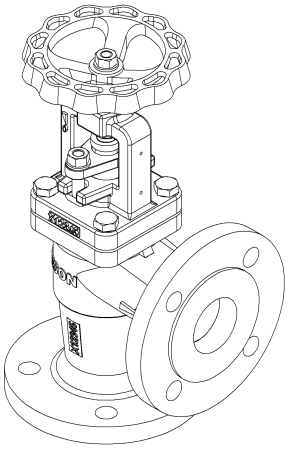

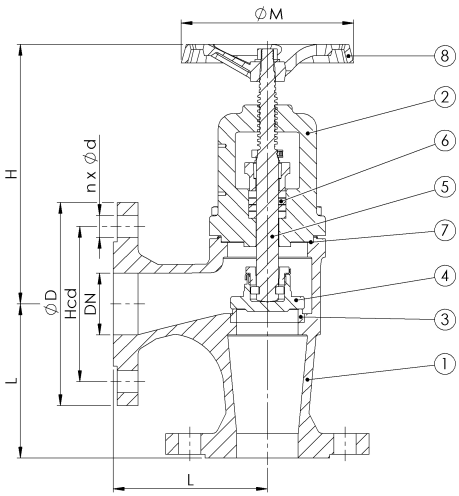

2023-01-08